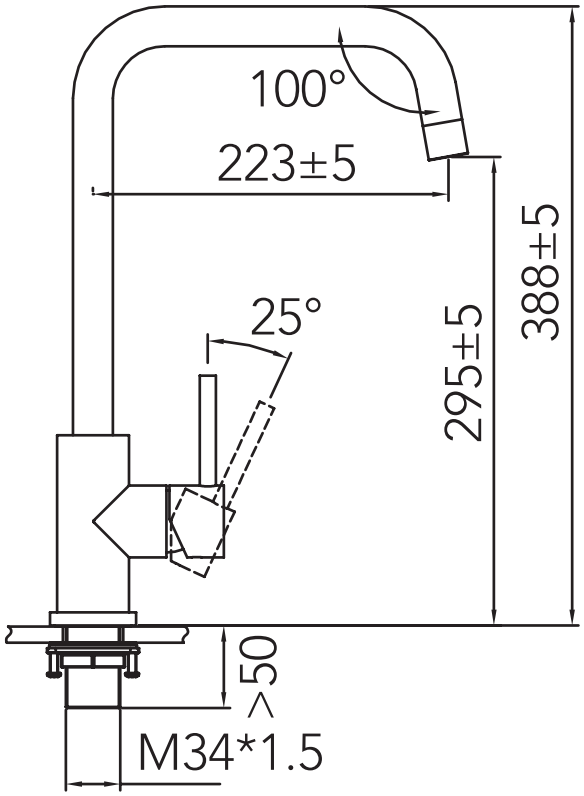CARESSI®